Scale 1:10 Roof

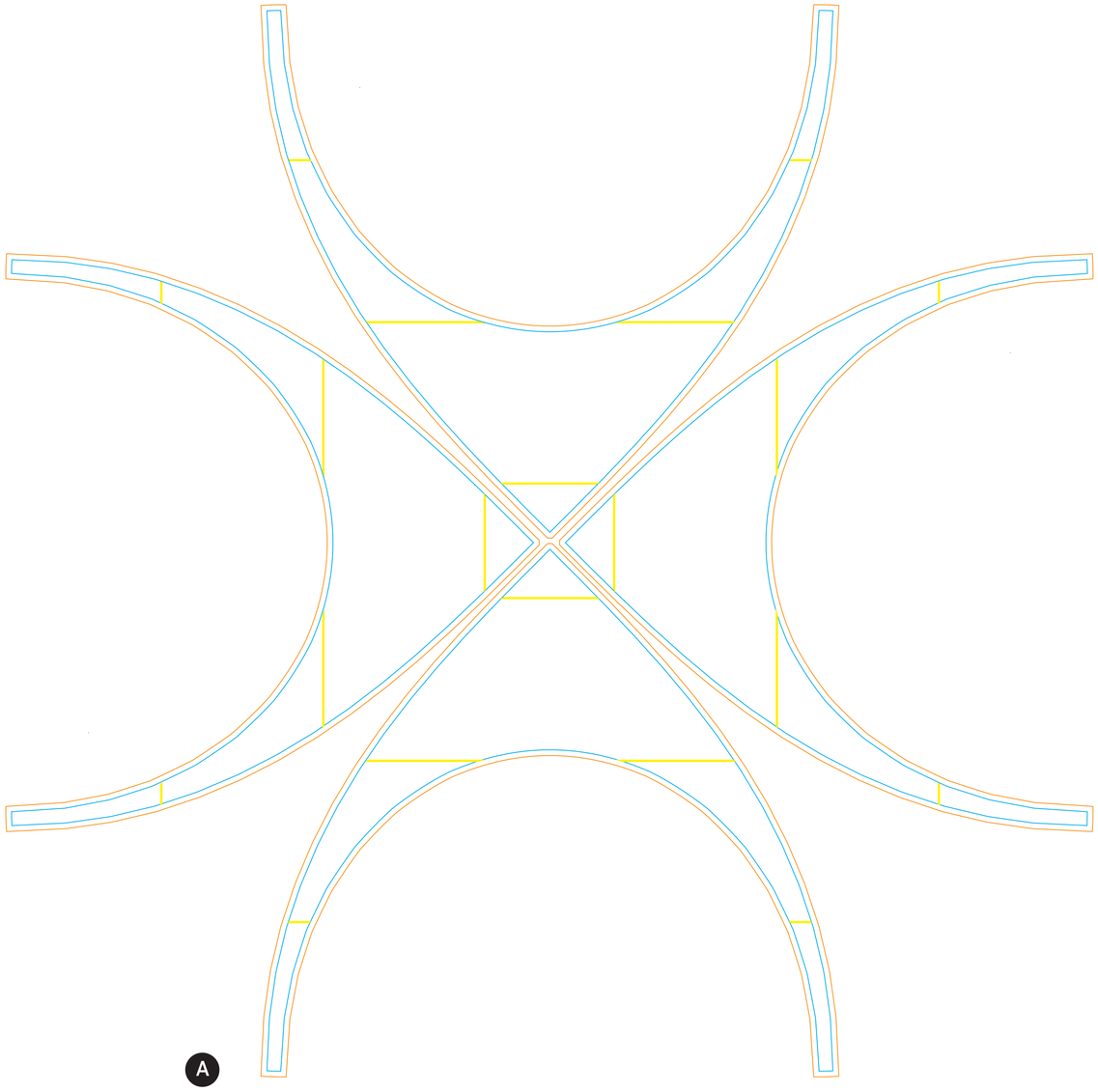

Inflatable Tent

5x5

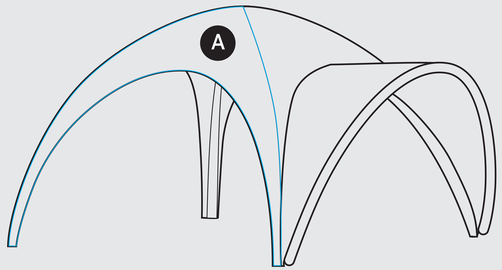

Make sure the document color mode is set to CMYK and use CMYK-profile Fogra 39.
Make your design in the Artwork layer.

Graphics	Use vector graphics to get a sharp result.
Colors	Preferably use Pantone Solid Coated otherwise use CMYK values.
Images	Effective resolution of at least 80 ppi, saved with CMYK-profile.
Text	Convert text to paths i.e. create outlines.

When you are happy with the design, save the document as a high quality printable PDF.

- Final product, graphics in this area will appear on the final product.
- Print area including bleed.
- Stitching.

Scale 1:10 Wall

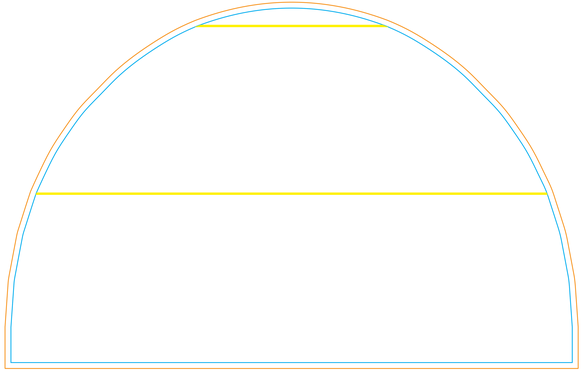

Wall

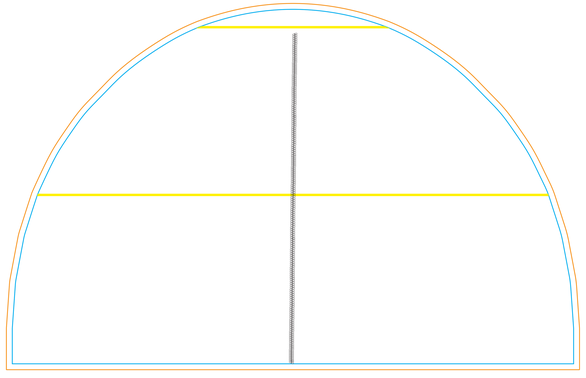

Door-wall

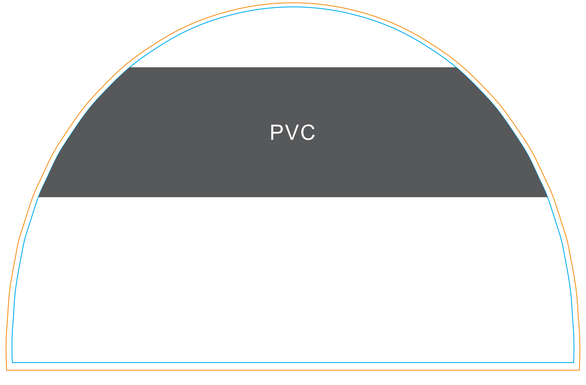

Window-wall

Inflatable Tent

5x5

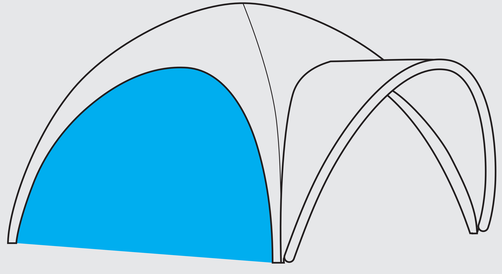

Scale 1:10 Awning

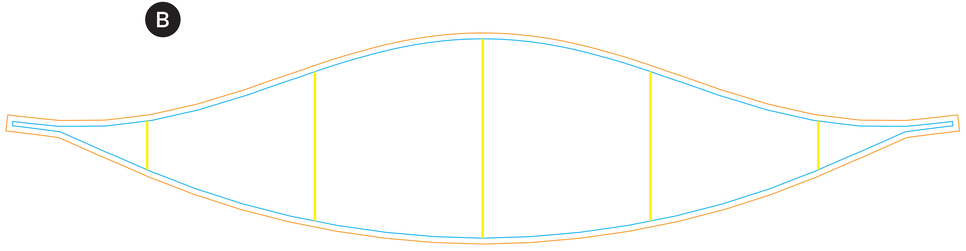

Inflatable Tent

5x5

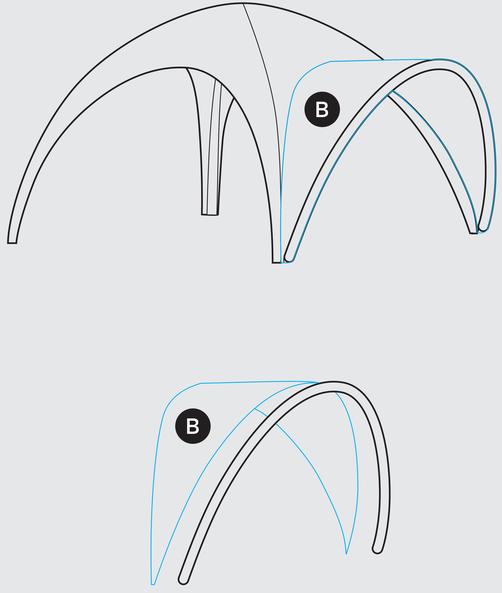

Scale 1:10 Connection

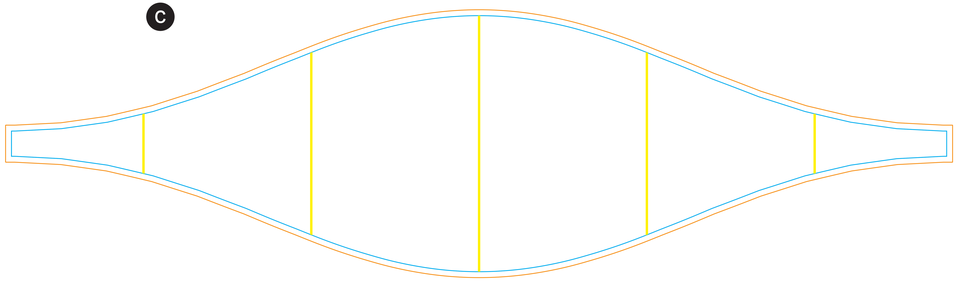

Inflatable Tent
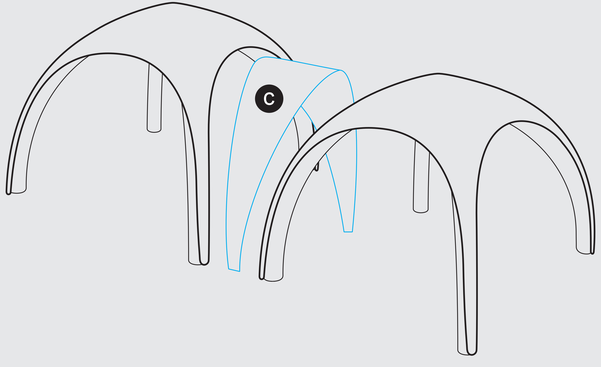
5x5